NO. DE DESSIN
DWG NO. NAM-BL229-CONDUITS-IN-EN

NOTES:

1. ENSURE PROPER DRAINAGE OF SOIL AROUND THE NEW FOUNDATION. WATER SHALL NOT ACCUMULATE AROUND THE FOUNDATION

2. CONCRETE CARACTERISTICS
   - COMPRESSIVE STRENGTH AT 28 DAYS : 4350 psi [30MPa]
   - MAXIMUM AGGREGATE : ø3/4" [ø19mm]
   - MAX WATER/CEMENT RATIO : 0.50
   - SLUMP : 3"±1" [76mm ± 25mm]
   - ENTRAINED AIR : 5 TO 8%

3. CHARACTERISTICS OF NON SHRINK CEMENT GROUT :
   - COMPRESSIVE STRENGTH AT 28 DAYS : 7252 psi [50 MPa]
   - ACCEPTED PRODUCT : SIKAGROUT 212 OR EQUIVALENT APPROVED BY THE OWNER ENGINEER

4. VIBRATE CONCRETE WHILE PLACING.

5. IN AREAS WHERE GROUND FREEZES, THE CONCRETE BASE MUST BE DEEP ENOUGH TO PREVENT IT FROM MOVING.

DESCRIPTION

1: CONCRETE BASE
2: INSTALLATION TEMPLATE MUST BE INSTALLED BEFORE THE CONCRETE IS MADE.
3: ø1" CONDUIT TO THE GUARD HOUSE.
4: ø1" CONDUIT FOR DETECTING LOOP (If required 1 conduit per loop).
5: ø3/4" CONDUIT TO THE POWER SUPPLY CABINET, 120V AC, 15 AMPS MAX CIRCUIT. (Ref. : 3 wires, 14 ga).
6: ø1/2" CONDUIT TO ELECTROMAGNETIC TIP SUPPORT (If required).
7: ø1/2" CONDUIT FOR THE EXIT CONTROL POST (If required).
8: ø1/2" CONDUIT FOR THE ENTRANCE CONTROL POST (If required).

BEFORE THE INSTALLATION OF THE BARRIER, THE WIRE MUST BE 4 FEET LONG ROM THE TOP OF THE CONCRETE BASE.

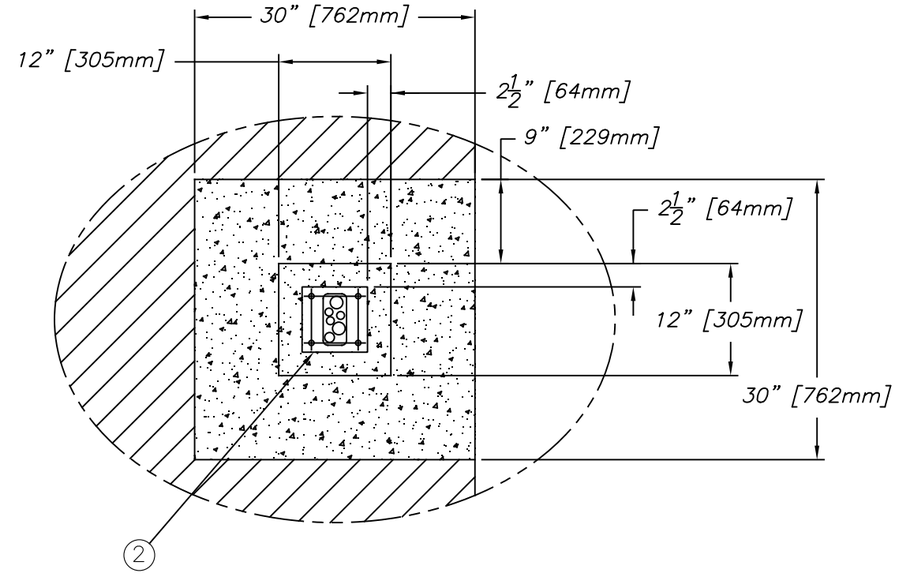

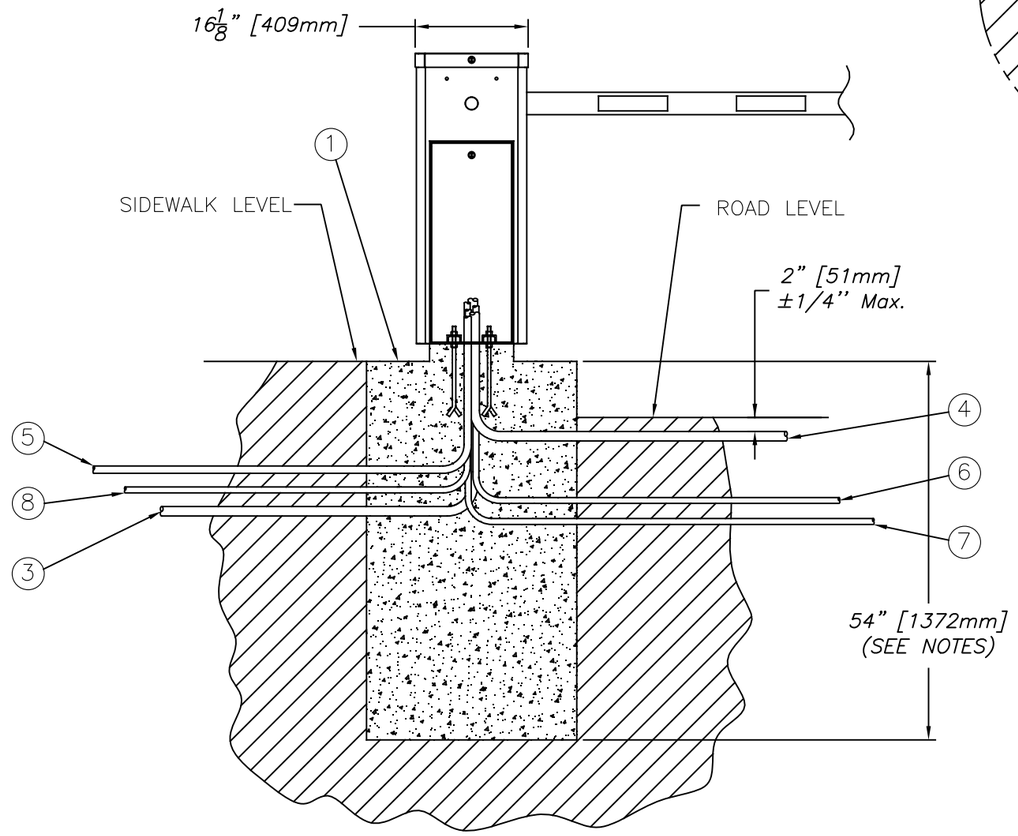

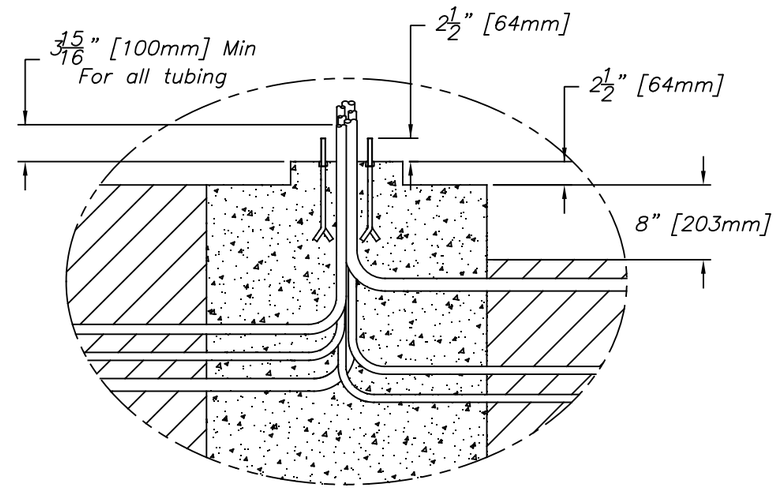

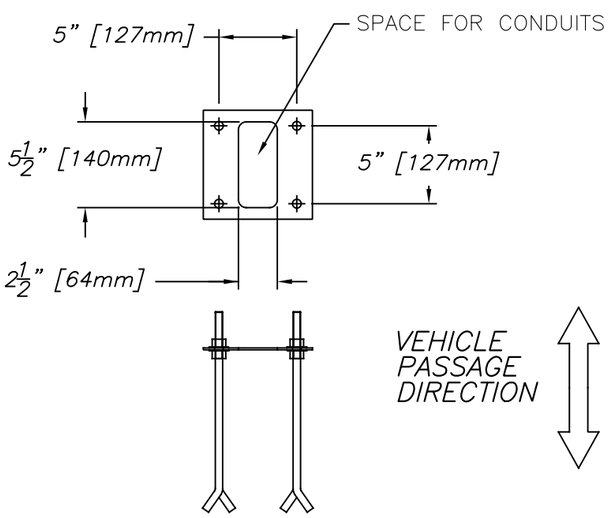

INSTALLATION TEMPLATE DETAILS

BL229 SEALING TEMPLATE KIT : E/1929/031

REV	DATE	MODIFICATIONS/CHANGES	PAR/BY
-	-	-	-

REVISIONS

MATÉRIAU/MATERIAL		
-		
TRAITEMENT/TREATMENT		
-		
FINI/FINISH		
-		
NB./App.	POIDS/WEIGHT	SURFACE
-	-	-

LES DIMENSIONS SONT EN POUCES / DIMENSIONS ARE IN INCHES

TOLÉRANCES

.XXX	± .005
.XX	± .010
.X	± .015
FRAC.	± 1/32
ANGLES	±1/2°

SAUF SI INDIQUÉS
UNLESS OTHERWISE NOTED

EBARBER & ENLEVER LES ARÊTES VIVES. DIM SELON ASME Y14.5 1994. NE PAS MESURER SUR LE DESSIN

BREAK ALL SHARP EDGES AND CORNERS. ALL DIM PER ASME Y14.5 1994. DO NOT SCALE DRAWING

AUTOMATIC SYSTEMS

FICHIER / FILENAME
NAM-BL229-CONDUITS-IN-EN.DWG

LES INFORMATIONS CONTENUES SUR LES DESSINS DE ASA Inc. SONT CONFIDENTIELLES ET SONT LA PROPRIÉTÉ DE ASA Inc., TOUTES REPRODUCTIONS, DISTRIBUTIONS OU UTILISATIONS SONT INTERDITES SANS LA PERMISSION DE ASA Inc.

INFORMATION DISCLOSED HERE IS CONFIDENTIAL AND IS THE PROPERTY OF ASA Inc., ANY REPRODUCTION, DISTRIBUTION OR USE IS PROHIBITED WITHOUT A WRITTEN CONSENT BY ASA Inc.

TITRE / TITLE: STANDARD CONDUIT & CONCRETE BASE LAYOUT BL229

ÉCHELLE/SCALE	FORMAT/SIZE	DATE	FEUILLE/SHEET	DE/OF
N/A	B	2017/06/06	1	1

DESSINÉ PAR / DRAWN BY: OHL
VÉRIFIÉ PAR / CHECKED BY: SSA
NO. DE DESSIN/DWG. NO.: NAM-BL229-CONDUITS-IN-EN
REV: A

WARNING

-RESPECT ALL LAWS AND STANDARDS APPLICABLE WHERE THE BARRIER WILL BE INSTALLED.
-READ THE INSTALLATION AND USER MANUAL BEFORE INSTALLING AND USING THE BARRIER.
-THE BARRIER MUST BE INSTALLED BY A TRAINED OR CERTIFIED WORKER.