DWG No.	VOIR ASSEMBLAGE/SEE ASS'Y	No. DE DESSIN / DWG No.
NAM–SL911–IN–00–EN	–	–

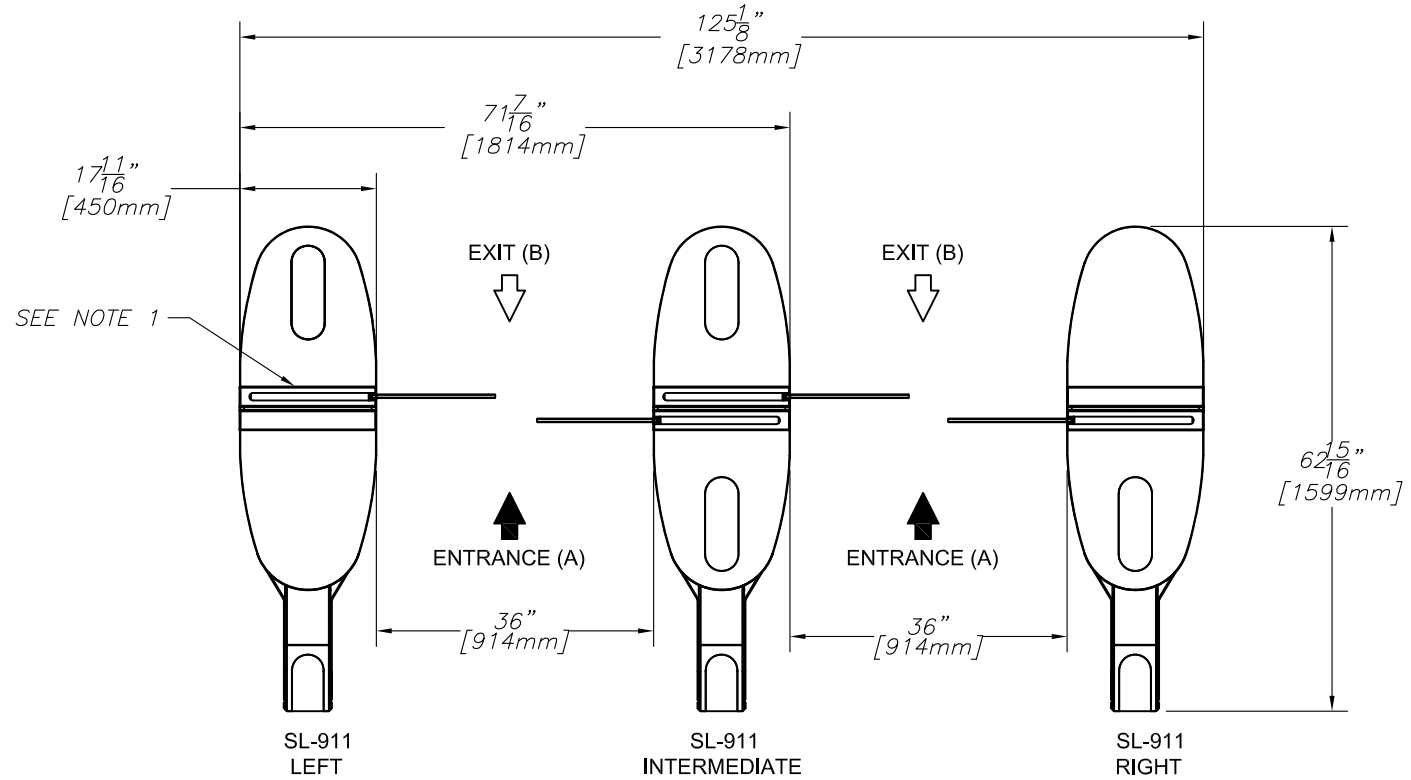

GLASS HEIGHT		
A	39"(990mm)	OPTION
B	47"(1194mm)	OPTION
C	67"(1701mm)	STD

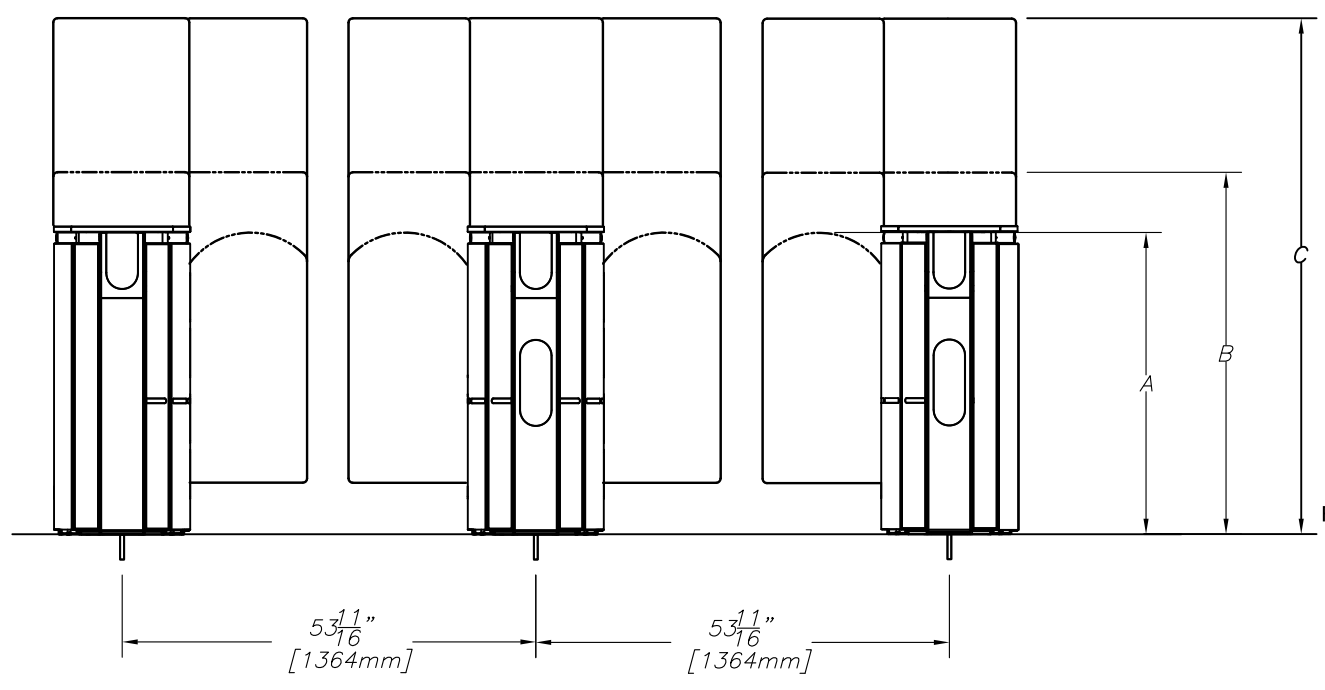

ENTRANCE VIEW

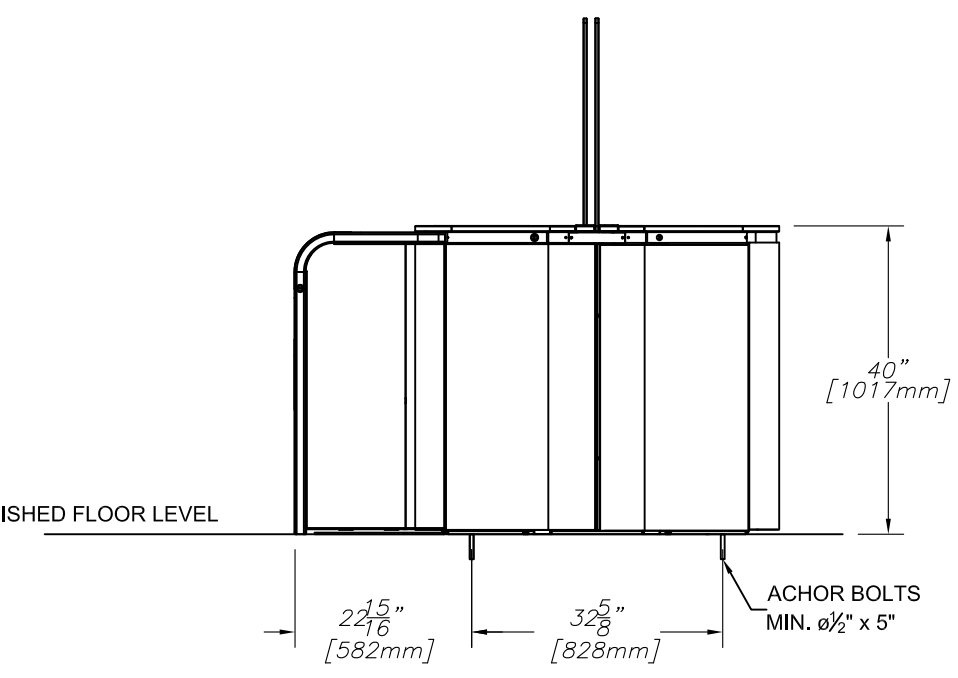

NOTE:
1–SHUTTERS ONLY PRESENT ON UNITS WITH 47" OR 67" GLASS.
2–FOR ELECTRICAL CONNECTIONS, CONDUITS AND TEMPLATE LAYOUT REFER TO NAM–SL–EL–EN–01.

REV.	DATE	MODIFICATIONS/CHANGES	PAR/BY
A	2012/01/30	NEW RELEASE	JPS

automatic systems america inc.

AUTOMATIC SYSTEMS MAKES NO REPRESENTATION AS TO THE PROPER POSITIONING OF THE SECURITY ENTRANCE LANES AT THE INSTALLATION LOCATION. ESTABLISHING THE LAYOUT AND PLACEMENT OF THE UNIT(S) AND DETERMINING COMPLIANCE WITH THE APPLICABLE BUILDING CODES, OTHER CODES, LAWS AND REGULATIONS IS THE SOLE RESPONSIBILITY OF THE PURCHASER. INSTALLATION MUST BE PERFORMED BY A QUALIFIED INSTALLER FOLLOWING MANUFACTURER'S INSTRUCTIONS, OTHERWISE AUTOMATIC SYSTEMS' WARRANTIES MAY BE VOID.

MATÉRIAU/MATERIAL	FICHIER FILENAME NAM–SL911–IN–00–EN.DWG		
–			
FABRICATION	TRAITEMENT/TREATMENT	EBARBER LES ARÊTES VIVES BREAK ALL SHARP EDGES	
–	–		
Nb./App.	POIDS/WEIGHT	SURFACE	FINI/FINISH
–	–	–	–

LES INFORMATIONS CONTENUES SUR LES DESSINS DE ASA Inc. SONT CONFIDENTIELLES ET SONT LA PROPRIÉTÉ DE ASA Inc. TOUTES REPRODUCTIONS, DISTRIBUTIONS OU UTILISATIONS SONT INTERDITES SANS LA PERMISSION ÉCRITE DE ASA Inc.

INFORMATION DISCLOSED HERE IS CONFIDENTIAL AND IS THE PROPERTY OF ASA Inc., ANY REPRODUCTION, DISTRIBUTION OR USE IS PROHIBITED WITHOUT A WRITTEN CONSENT BY ASA Inc.

IMPERIAL	METRIC
X/X ±1/32"	X ±1mm
X.X ±0.030"	X.X ±0.5mm
X.XX ±0.015"	X.XX ±0.05mm
X.XXX ±0.005"	
ANGLES ± 1/2°	

SAUF SI INDIQUÉS
UNLESS OTHERWISE NOTED

DIMENSIONS	FORMAT
–	B

TITRE
TITLE SL–911 2LANES

DESSINÉ PAR / DRAWN BY	ÉCHELLE/SCALE	DATE	FEUILLE/SHEET	DE/OF
JPS	N/A	2012–01–30	1	1

VÉRIFIÉ PAR / CHECKED BY	No. DESSIN/DWG. No.	REV.
–	NAM–SL911–IN–00–EN	A