NO. DE DESSIN
DWG NO. NAM-SLIM944-IN-01-EN

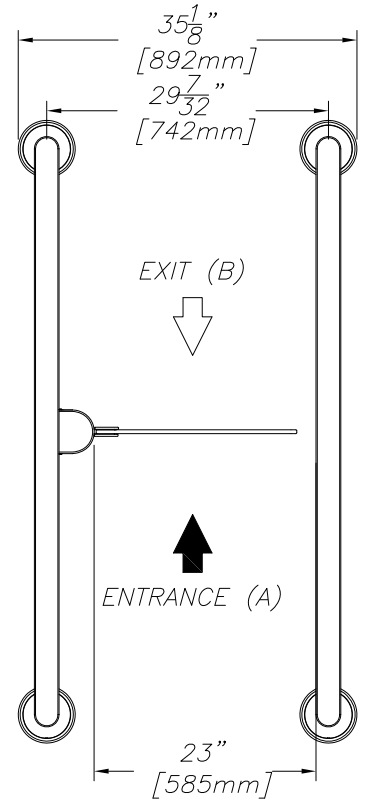

	OBSTACLE HEIGHT	
A	35 7/16" [900mm]	STD
B	47" [1194mm]	OPT
C	67" [1702mm]	OPT

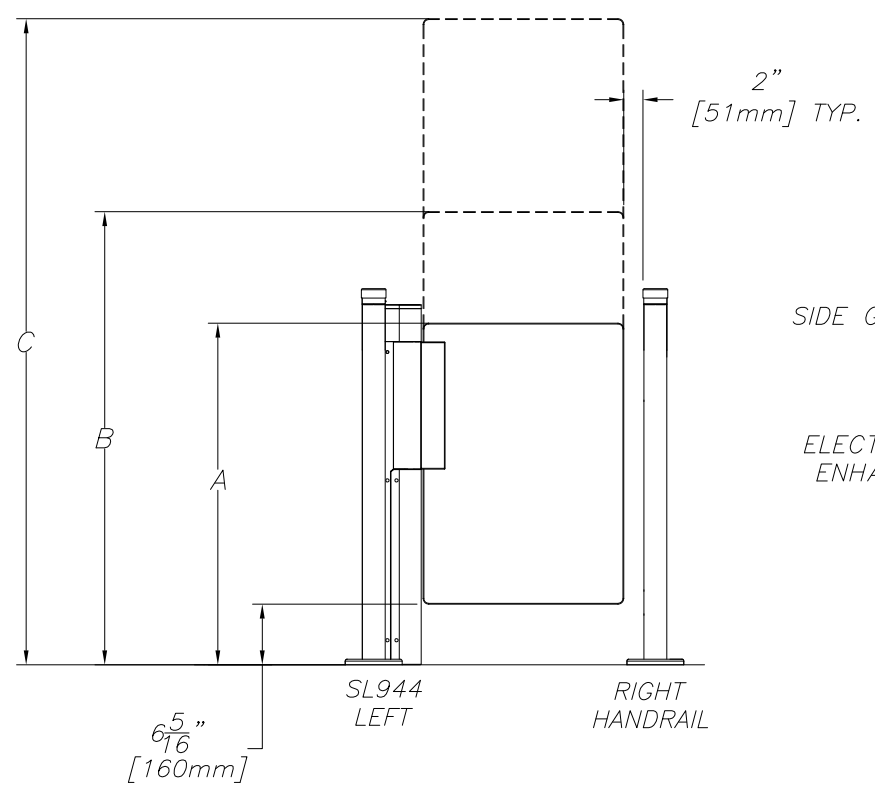

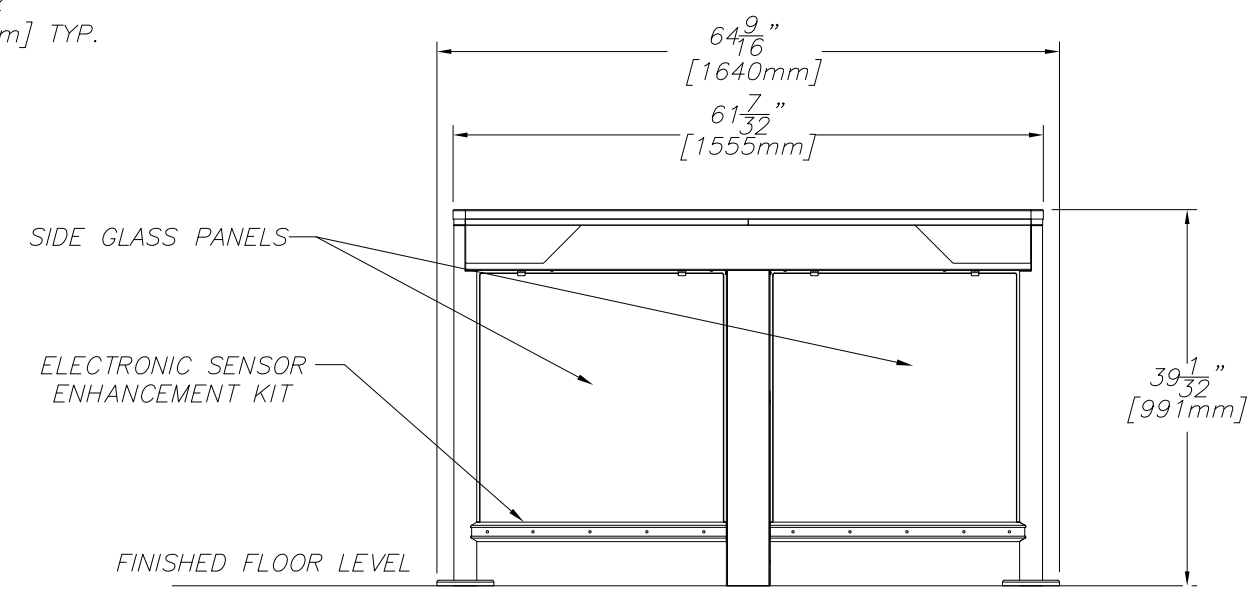

NOTE:

1-FOR ELECTRICAL CONNECTIONS, CONDUITS AND TEMPLATE LAYOUT REFER TO NAM-SLIM-EL-EN-03

2-FOR READER DIMENSIONS REFER TO NAM-SLIM-DS-01-EN-A

AUTOMATIC SYSTEMS MAKES NO REPRESENTATION AS TO THE PROPER POSITIONING OF THE SECURITY ENTRANCE LANES AT THE INSTALLATION LOCATION. ESTABLISHING THE LAYOUT AND PLACEMENT OF THE UNIT(S) AND DETERMINING COMPLIANCE WITH THE APPLICABLE BUILDING CODES, OTHER CODES, LAWS AND REGULATIONS IS THE SOLE RESPONSIBILITY OF THE PURCHASER. INSTALLATION MUST BE PERFORMED BY A QUALIFIED INSTALLER FOLLOWING MANUFACTURER'S INSTRUCTIONS, OTHERWISE AUTOMATIC SYSTEMS' WARRANTIES MAY BE VOID.

REV	DATE	MODIFICATIONS/CHANGES	PAR/BY
–	–	–	–

REVISIONS

MATÉRIAU/MATERIAL		
–		
TRAITEMENT/TREATMENT		
–		
FINI/FINISH		
–		
NB./App.	POIDS/WEIGHT	SURFACE
–	–	–

LES DIMENSIONS SONT EN POUCES / DIMENSIONS ARE IN INCHES

TOLÉRANCES

.XXX	± .005
.XX	± .010
.X	± .015
FRAC.	± 1/32
ANGLES	±1/2°

SAUF SI INDIQUÉS
UNLESS OTHERWISE NOTED

EBARBER & ENLEVER LES ARÊTES VIVES. DIM SELON ASME Y14.5 1994. NE PAS MESURER SUR LE DESSIN

BREAK ALL SHARP EDGES AND CORNERS. ALL DIM PER ASME Y14.5 1994. DO NOT SCALE DRAWING

AUTOMATIC SYSTEMS
ASA GROUP

FICHIER / FILENAME
NAM-SLIM944-IN-01-EN.DWG

LES INFORMATIONS CONTENUES SUR LES DESSINS DE ASA Inc. SONT CONFIDENTIELLES ET SONT LA PROPRIÉTÉ DE ASA Inc., TOUTES REPRODUCTIONS, DISTRIBUTIONS OU UTILISATIONS SONT INTERDITES SANS LA PERMISSION DE ASA Inc.

INFORMATION DISCLOSED HERE IS CONFIDENTIAL AND IS THE PROPERTY OF ASA Inc., ANY REPRODUCTION, DISTRIBUTION OR USE IS PROHIBITED WITHOUT A WRITTEN CONSENT BY ASA Inc.

TITRE
TITLE INSTALLATION 1 LEFT SLIMLANE 944 WITH HANDRAIL

ÉCHELLE/SCALE	FORMAT/SIZE	DATE	FEUILLE/SHEET	DE/OF
NTS	B	2013/01/24	1	1

DESSINÉ PAR
DRAWN BY JPS

VÉRIFIÉ PAR
CHECKED BY PWI

NO. DE DESSIN/DWG. NO. NAM-SLIM944-IN-01-EN REV A