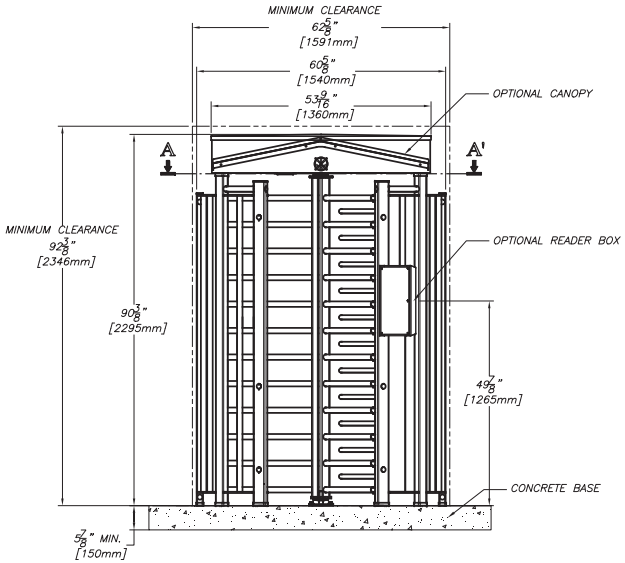

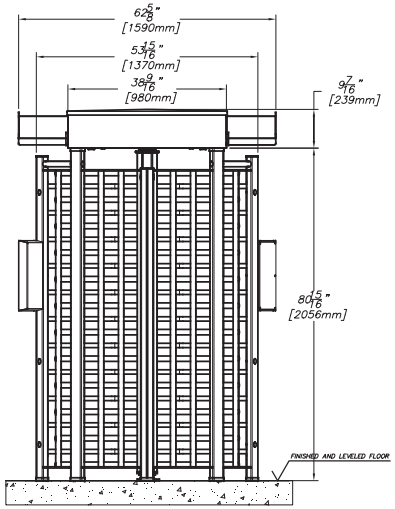

TEMPLATE POSITIONNING – ITEM NO. GAB–E–0007770

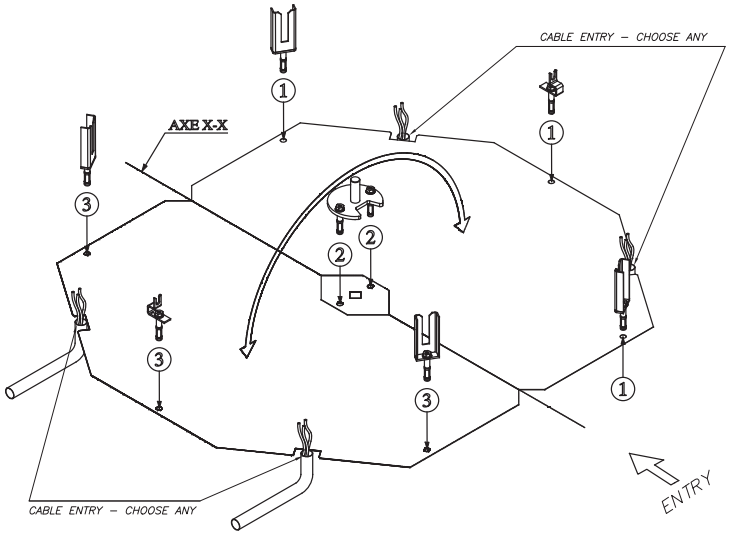

– Position the template according to the direction of entry.
– 4 cable entry points are available (max. Ø1/2" [12,7 mm]).
– Mark points 1 and 2 ,as well as X–X axis.
– Rotate the template around the X–X axis.
– Position the template according to points 2 .
– Mark points 3 .

A–A' SECTION

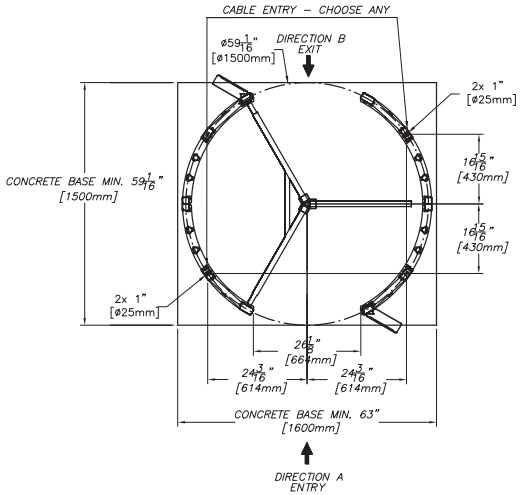

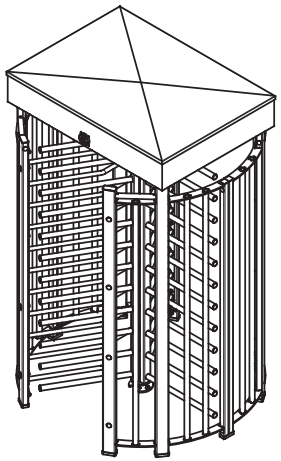

POWER SUPPLY:
Single phase 120V – 2x 12 AWG cable (as per local electrical code)
Recommended PVC tube dimension for power supply cable: Ø 1/2 in [12,7 mm]

CONTROL CABLE:
Shielded control cable
Recommended PVC tube dimension for control cable: Ø 1/2 in [12,7 mm]

ALL CABLES TO BE SUPPLIED WITH A MINIMUM 10 ft [3 m] FREE TAIL.

AUTOMATIC SYSTEMS N'ACCEPTE AUCUNE RESPONSABILITÉ EN CE QUI CONCERNE LE PLACEMENT ET LA LOCALISATION DES PORTILLONS OPTIQUES. IL EST DE LA REPONSABILITÉ DE L'ACHETEUR DE DÉFINIR LA POSITION, LA DISPOSITION DES ÉQUIPEMENTS AINSI QUE DE VALIDER LA CONFORMITÉ AUX CODES DU BATIMENTS ET AUTRES CODES, LOIS ET RÉGLEMENTS APPLICABLES.
AUTOMATIC SYSTEMS SE RÉSERVE LE DROIT D'ANNULER LA GARANTIE SI L'INSTALLATION N'EST PAS RÉALISÉE PAR UN INSTALLATEUR QUALIFIÉ SELON LES INSTRUCTIONS DU FABRICANT.

AUTOMATIC SYSTEMS MAKES NO REPRESENTATION AS TO THE PROPER POSITIONING OF THE SECURITY ENTRANCE LANES AT THE INSTALLATION LOCATION. ESTABLISHING THE LAYOUT AND PLACEMENT OF THE UNIT(S) AND DETERMINING COMPLIANCE WITH THE APPLICABLE BUILDING CODES, OTHER CODES, LAWS AND REGULATIONS IS THE SOLE RESPONSIBILITY OF THE PURCHASER. INSTALLATION MUST BE PERFORMED BY A QUALIFIED INSTALLER FOLLOWING MANUFACTURER'S INSTRUCTIONS, OTHERWISE AUTOMATIC SYSTEMS' WARRANTIES MAY BE VOID.

REV	DATE	MODIFICATIONS/CHANGES	PAR/BY
F	2026–08–03	CHANGED OPTIONAL READERS BOX	HAF
E	2025–02–20	13 TO 12–BAR MOBILE COMBS	PHB
D	2019–08–28	MINIMUM CLEARANCE SPECIFICATION ADDED	JPS/VBO
C	2016–11–09	CHANGE CONDUIT DIMENSIONS AND CANOPY OPTION	PLA/SSA

LES INFORMATIONS CONTENUES SUR LES DESSINS DE ASA Inc. SONT CONFIDENTIELLES ET SONT LA PROPRIÉTÉ DE ASA Inc., TOUTES REPRODUCTIONS, DISTRIBUTIONS OU UTILISATIONS SONT INTERDITES SANS LA PERMISSION DE ASA Inc.
INFORMATION DISCLOSED HERE IS CONFIDENTIAL AND IS THE PROPERTY OF ASA Inc., ANY REPRODUCTION, DISTRIBUTION OR USE IS PROHIBITED WITHOUT A WRITTEN CONSENT BY ASA Inc.

AUTOMATIC SYSTEMS

FICHIER / FILENAME: NAM–TRS370–IN–02–EN.DWG

TITRE / TITLE: TRS370 – INSTALLATION WITH TEMPLATE.

ÉCHELLE/SCALE	FORMAT/SIZE	DATE	FEUILLE/SHEET	DE/OF
N/A	B	2011/01/13	1	1

DESSINÉ PAR / DRAWN BY: SSA
VÉRIFIÉ PAR / CHECKED BY: MTO
NO. DE DESSIN/DWG. NO.: NAM–TRS370–IN–02–EN
REV: F